YGE 185 SERIES

YL195P-23b
YL190P-23b
YL185P-23b
YL180P-23b
YL175P-23b

YINGLI SOLAR
OFFICIAL SPONSOR
FIFA WORLD CUP Brasil

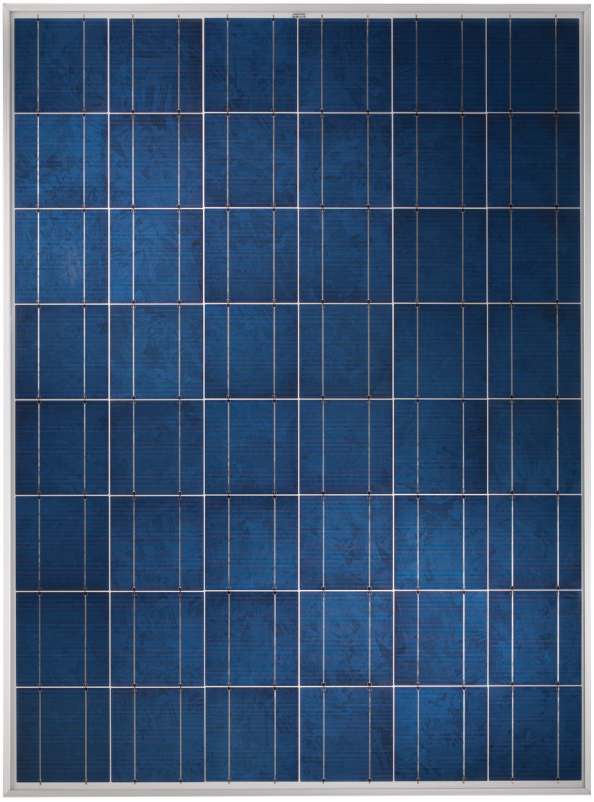

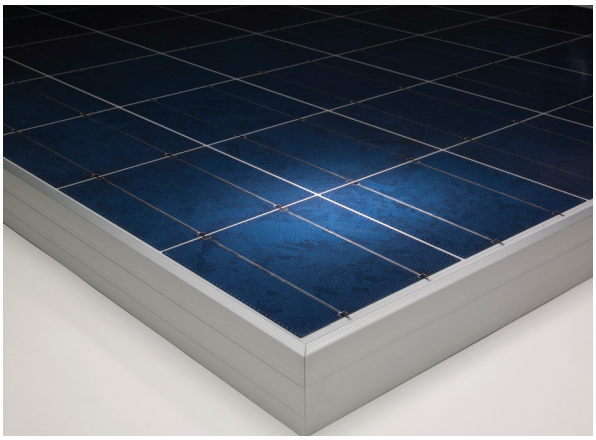

ABOUT YINGLI GREEN ENERGY

Yingli Green Energy Holding Company Limited (NYSE: YGE) is one of the world's largest fully vertically integrated PV manufacturers, which markets its products under the brand "Yingli Solar". With over 2GW of modules installed globally, we are a leading solar energy company built upon proven product reliability and sustainable performance. We are the first renewable energy company and the first Chinese company to sponsor the FIFA World Cup™.

PERFORMANCE

- High efficiency, multicrystalline solar cells with high transmission and textured glass deliver a module efficiency of up to 15.0%, minimizing installation costs and maximizing the kWh output of your system per unit area.
- Tight positive power tolerance of 0W to +5W ensures you receive modules at or above nameplate power and contributes to minimizing module mismatch losses leading to improved system yield.

QUALITY & RELIABILITY

- Robust, corrosion resistant aluminum frames independently tested to withstand wind loads of up to 2.4kPa and snow loads of up to 5.4kPa ensuring a stable mechanical life for your modules.
- Module packaging optimized to protect product during transportation and minimize on-site waste.
- Modules independently tested to ensure conformance with certification and regulatory standards.
- Manufacturing facility certified by TÜV Rheinland to ISO 9001:2008, ISO 14001:2004 and BS OHSAS 18001:2007.

WARRANTIES

- 10-year limited product warranty[1].
- Limited power warranty[1]: 10 years at 91.2% of the minimal rated power output, 25 years at 80.7% of the minimal rated power output.

[1] In compliance with our Warranty Terms and Conditions.

QUALIFICATIONS & CERTIFICATES

IEC 61215, IEC 61730, MCS, CE, ISO 9001:2008, ISO 14001:2004, BS OHSAS 18001:2007, SA 8000, PV Cycle

APPROVED PRODUCT
MCS PV0022

YINGLISOLAR.COM

YGE 185 SERIES

ELECTRICAL PERFORMANCE

Electrical parameters at Standard Test Conditions (STC)							
Module name			YGE 195	YGE 190	YGE 185	YGE 180	YGE 175
Module type			YL195P-23b	YL190P-23b	YL185P-23b	YL180P-23b	YL175P-23b
Power output	P_{max}	W	195	190	185	180	175
Power output tolerances	ΔP_{max}	W	-0 ~ +5				
Module efficiency	η_m	%	15.0	14.7	14.3	13.9	13.5
Voltage at P_{max}	V_{mpp}	V	24.0	23.7	23.5	23.0	23.0
Current at P_{max}	I_{mpp}	A	8.10	8.00	7.87	7.83	7.61
Open-circuit voltage	V_{oc}	V	30.3	30.1	29.5	29.5	29.0
Short-circuit current	I_{sc}	A	8.62	8.48	8.45	8.30	8.20

STC: 1000W/m² irradiance, 25°C module temperature, AM1.5g spectrum according to EN 60904-3.
Ave. efficiency reduction of 5% at 200W/m² according to EN 60904-1.

Electrical parameters at Nominal Operating Cell Temperature (NOCT)							
Power output	P_{max}	W	141.6	138.0	134.3	130.7	127.1
Voltage at P_{max}	V_{mpp}	V	21.7	21.4	21.2	20.7	20.7
Current at P_{max}	I_{mpp}	A	6.53	6.45	6.34	6.31	6.13
Open-circuit voltage	V_{oc}	V	27.7	27.5	26.9	26.9	26.5
Short-circuit current	I_{sc}	A	6.98	6.87	6.85	6.72	6.64

NOCT: open-circuit module operation temperature at 800W/m² irradiance, 20°C ambient temperature, 1m/s wind speed.

THERMAL CHARACTERISTICS

Nominal operating cell temperature	NOCT	°C	46 +/- 2
Temperature coefficient of P_{max}	γ	%/°C	-0.45
Temperature coefficient of V_{oc}	β_{Voc}	%/°C	-0.37
Temperature coefficient of I_{sc}	α_{Isc}	%/°C	0.06

OPERATING CONDITIONS

Max. system voltage	$1000V_{DC}$
Max. series fuse rating	15A
Limiting reverse current	Do not apply external voltages larger than V_{oc} of the module.
Operating temperature range	-40 to 85°C
Max. static load, front (e.g., snow and wind)	5400Pa
Max. static load, back (e.g., wind)	2400Pa
Max. hailstone impact (diameter / velocity)	25mm / 23m/s

CONSTRUCTION MATERIALS

Front cover (material / type / thickness)	low-iron tempered glass / 3.2mm
Cell (quantity / material / type / dimensions)	48 / multicrystalline / 156mm x 156mm
Encapsulant (material)	ethylene vinyl acetate (EVA)
Frame (material / color / anodization color)	anodized aluminum alloy / silver / clear
Junction box (protection degree)	IP65
Cable (length / cross-sectional area)	900mm / 4mm²
Plug connector (type / protection degree)	MC4 / IP67 or Amphenol H4 / IP68

- Due to continuous innovation, research and product improvement, the specifications in this product information sheet are subject to change without prior notice. The specifications may deviate slightly and are not guaranteed.
- The data do not refer to a single module and they are not part of the offer, they only serve for comparison to different module types.

GENERAL CHARACTERISTICS

Dimensions (L / W / H)	1310mm / 990mm / 50mm
Weight	15.8kg

PACKAGING SPECIFICATIONS

Number of modules per pallet	20
Number of pallets per 40' container	32
Packaging box dimensions (L / W / H)	1380mm / 1150mm / 1170mm
Box weight	353kg

Unit: mm

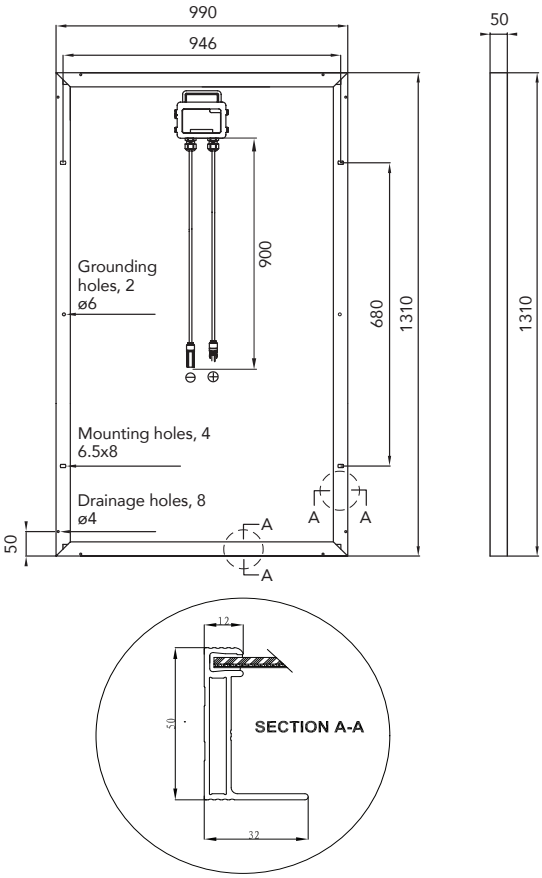

Warning: Read the instruction manual in its entirety before handling, installing, and operating Yingli Solar modules.

Our Partners:

Yingli Green Energy Holding Co. Ltd.
service@yinglisolar.com
Tel: +0086-312-8929802

YINGLISOLAR.COM

© Yingli Green Energy Holding Co. Ltd. | DS_YL185P-23b_2BB_EU_EN_201109_v02.6

YINGLI SOLAR OFFICIAL SPONSOR FIFA WORLD CUP Brasil